# Wood Connectors

## Face Mount Joist Hangers

**U Hangers and Inverted Flange U Hangers (UL, ULP, ULP-IF, UM, UH & UH-IF Series)**

**PRODUCT FEATURES:**

U-Hanger and Inverted Flange (IF) U-Hanger Series are face mount joist hangers used to resist gravity loads and uplift loads due to wind in one-, two- and three-ply joist assemblies in light-frame wood construction. These are used as wood framing connectors in accordance with IBC Section 2304.10.3 and IRC Section R301.1.3.

**MATERIAL:**

UL Series - 20 Gauge
ULP & ULP-IF Series - 18 Gauge
UM Series - 16 Gauge
UH & UH-IF Series - 14 Gauge

**COATING:** Galvanized (Zinc), G185

**INSTALLATION:**

- Use all specified fasteners in schedule to achieve values indicated
- All U-Hangers have slant nailing. These must be used to achieve published load values. The nails must be driven at an angle (approx. 41º) in the joist and into the header.
- For all Hangers, use 16d common nails (0.162 x3-1/2") for hanger-to-header attachment
- For all Inverted Flange (IF) Hangers, use 10d common nails (0.148 x 3") for hanger-to-joist attachment
- Hangers are not allowed to be modified
- Hangers are not designed for welded applications

**CODE COMPLIANCE:** TER 1811-03; FL 3557

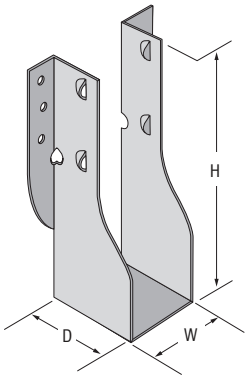


TYPICAL U HANGERS

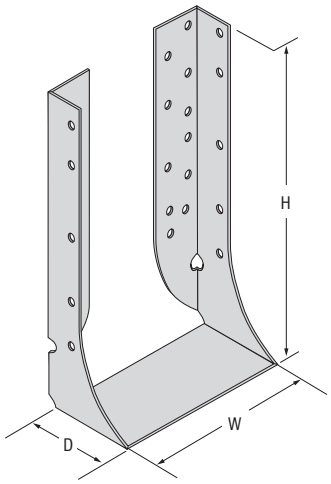


TYPICAL INVERTED FLANGE (IF) U HANGERS

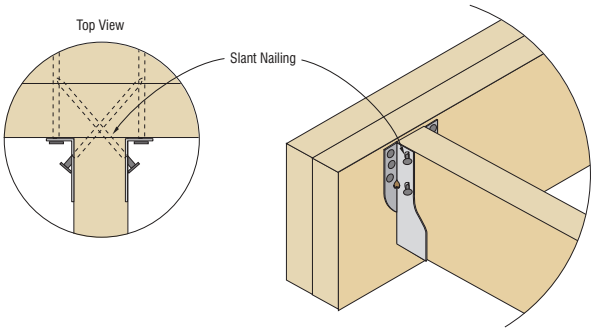


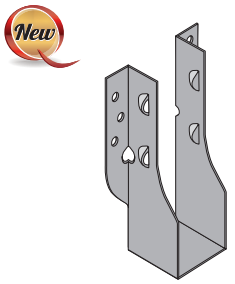

UL

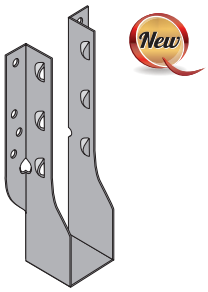

ULP

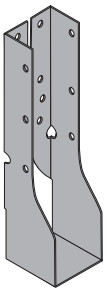

ULP-IF

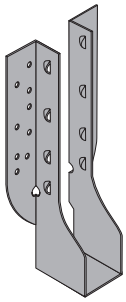

UM

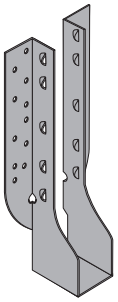

UH

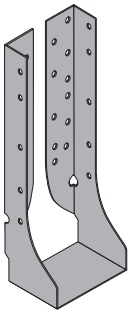

UH-IF

**NOTE:** Similar for 2-ply & 3-ply joist hangers

## ALLOWABLE LOADS FOR UL, ULP, ULP-IF, UM, UH & UH-IF SERIES HANGERS (LB)[1,2,3]

| Joist Size | Part No. | | | Hanger Dimensions | | | Steel Thick. | Fasteners | | | | SP/DF-L (SG = 0.50) | | | | HF/SPF (SG = 0.42) | | | |
|---|---|---|---|---|---|---|---|---|---|---|---|---|---|---|---|---|---|---|---|
| | | | | Width | Height | Depth | | Header | | Joist | | Floor | Roof | Roof | Uplift | Floor | Roof | Roof | Uplift |
| | QT | Reference No. | | W (in.) | H (in.) | D (in.) | | Qty. | Size | Qty. | Size | 1 | 1.15 | 1.25 | 1.6 | 1 | 1.15 | 1.25 | 1.6 |
| 2x6 (1-ply) | UL26 | LU26 | JL26 | 1-5/8 | 5-3/8 | 1-3/4 | 20 ga | 6 | 16d | 4 | 16d | 1215 | 1215 | 1215 | 510 | 965 | 965 | 965 | 440 |
| | ULP26 | LUS26, MUS26 | JUS26,MUS26 | | | | 18 ga | 6 | 16d | 4 | 16d | 1230 | 1415 | 1435 | 670 | 1065 | 1110 | 1110 | 580 |
| | ULP-IF26 | LUC26Z | JL26IF-TZ | | | | 18 ga | 6 | 16d | 4 | 10d | 830 | 955 | 1040 | 745 | 715 | 825 | 895 | 640 |
| | UM26 | U26 | SUH26 | | | 2-1/4 | 16 ga | 6 | 16d | 6 | 16d | 1445 | 1540 | 1540 | 600 | 1245 | 1245 | 1245 | 525 |
| | UH26 | HU26 | HD26 | | | | 14 ga | 6 | 16d | 6 | 16d | 1465 | 1540 | 1540 | 1155 | 1205 | 1205 | 1205 | 1005 |
| 2x6 (2-ply) | UL26-2 | - | - | 3-1/8 | 4-5/8 | 1-3/4 | 20 ga | 6 | 16d | 4 | 16d | 1215 | 1215 | 1215 | 510 | 965 | 965 | 965 | 440 |
| | ULP26-2 | LUS26-2 | JUS26-2 | | | | 18 ga | 6 | 16d | 4 | 16d | 1230 | 1415 | 1435 | 670 | 1065 | 1110 | 1110 | 580 |
| | ULP-IF26-2 | - | - | | | | 18 ga | 6 | 16d | 4 | 10d | 830 | 955 | 1040 | 745 | 715 | 825 | 895 | 640 |
| | UM26-2 | U26-2 | SUH26-2 | | | 2-1/4 | 16 ga | 6 | 16d | 6 | 16d | 1445 | 1540 | 1540 | 600 | 1245 | 1245 | 1245 | 525 |
| | UH26-2 | HUS26-2 | HUS26-2 | | | | 14 ga | 6 | 16d | 6 | 16d | 1465 | 1540 | 1540 | 1155 | 1205 | 1205 | 1205 | 1005 |
| | UH-IF26-2 | HUSC26-2, HUC26-2 | HUS26-2IF, HD26-2IF | | | | 14 ga | 6 | 16d | 6 | 10d | 865 | 995 | 1080 | 1170 | 750 | 860 | 935 | 1015 |
| 2x6 (3-ply) | UL26-3 | - | - | 4-5/8 | 3-7/8 | 1-3/4 | 20 ga | 6 | 16d | 4 | 16d | 1215 | 1215 | 1215 | 510 | 965 | 965 | 965 | 440 |
| | ULP26-3 | LUS26-3 | JUS26-3 | | | | 18 ga | 6 | 16d | 4 | 16d | 1230 | 1415 | 1435 | 670 | 1065 | 1110 | 1110 | 580 |
| | ULP-IF26-3 | - | - | | | | 18 ga | 6 | 16d | 4 | 10d | 830 | 955 | 1040 | 745 | 715 | 825 | 895 | 640 |
| | UM26-3 | U26-3 | SUH26-3 | | | 2-1/4 | 16 ga | 6 | 16d | 6 | 16d | 1445 | 1540 | 1540 | 600 | 1245 | 1245 | 1245 | 525 |
| | UH26-3 | HU26-3 | HD26-3 | | | | 14 ga | 6 | 16d | 6 | 16d | 1465 | 1540 | 1540 | 1155 | 1205 | 1205 | 1205 | 1005 |
| | UH-IF26-3 | HUC26-3 | HD26-3IF | | | | 14 ga | 6 | 16d | 6 | 10d | 865 | 995 | 1080 | 1170 | 750 | 860 | 935 | 1015 |
| 2x8 (1-ply) | UL28 | LU28 | JL28 | 1-5/8 | 7-1/8 | 1-3/4 | 20 ga | 8 | 16d | 6 | 16d | 1695 | 1855 | 1895 | 910 | 1400 | 1455 | 1490 | 785 |
| | ULP28 | LUS28, MUS28 | JUS28, MUS28 | | | | 18 ga | 8 | 16d | 6 | 16d | 1710 | 1955 | 2005 | 1025 | 1450 | 1525 | 1560 | 890 |
| | ULP-IF28 | - | JL28IF-TZ | | | | 18 ga | 8 | 16d | 6 | 10d | 1110 | 1275 | 1385 | 930 | 955 | 1100 | 1195 | 805 |
| | UM28 | - | SUH28 | | | 2-1/4 | 16 ga | 12 | 16d | 6 | 16d | 1885 | 1930 | 1930 | 600 | 1625 | 1625 | 1625 | 525 |
| | UH28 | HU28 | HD28 | | | | 14 ga | 12 | 16d | 6 | 16d | 1865 | 1960 | 1985 | 1155 | 1495 | 1525 | 1550 | 1005 |
| 2x8 (2-ply) | UL28-2 | - | - | 3-1/8 | 6/3/08 | 1-3/4 | 20 ga | 8 | 16d | 6 | 16d | 1695 | 1855 | 1895 | 910 | 1400 | 1455 | 1490 | 785 |
| | ULP28-2 | LUS28-2 | JUS28-2 | | | | 18 ga | 8 | 16d | 6 | 16d | 1710 | 1955 | 2005 | 1025 | 1450 | 1525 | 1560 | 890 |
| | ULP-IF28-2 | - | - | | | | 18 ga | 8 | 16d | 6 | 10d | 1110 | 1275 | 1385 | 930 | 955 | 1100 | 1195 | 805 |
| | UM28-2 | - | SUH28-2 | | | 2-1/4 | 16 ga | 12 | 16d | 6 | 16d | 1885 | 1930 | 1930 | 600 | 1625 | 1625 | 1625 | 525 |
| | UH28-2 | HUS28-2 | HUS28-2 | | | | 14 ga | 12 | 16d | 6 | 16d | 1865 | 1960 | 1985 | 1155 | 1495 | 1525 | 1550 | 1005 |
| | UH-IF28-2 | HUSC28-2,HUC28-2 | HUS28-2IF, HD28-2IF | | | | 14 ga | 12 | 16d | 6 | 10d | 1635 | 1775 | 1830 | 1170 | 1345 | 1470 | 1555 | 1015 |
| 2x8 (3-ply) | UL28-3 | - | - | 4-5/8 | 5-5/8 | 1-3/4 | 20 ga | 8 | 16d | 6 | 16d | 1695 | 1855 | 1895 | 910 | 1400 | 1455 | 1490 | 785 |
| | ULP28-3 | LUS28-3 | JUS28-3 | | | | 18 ga | 8 | 16d | 6 | 16d | 1710 | 1955 | 2005 | 1025 | 1450 | 1525 | 1560 | 890 |
| | ULP-IF28-3 | - | - | | | | 18 ga | 8 | 16d | 6 | 10d | 1110 | 1275 | 1385 | 930 | 955 | 1100 | 1195 | 805 |
| | UM28-3 | - | - | | | 2-1/4 | 16 ga | 12 | 16d | 6 | 16d | 1885 | 1930 | 1930 | 600 | 1625 | 1625 | 1625 | 525 |
| | UH28-3 | - | HD28-3 | | | | 14 ga | 12 | 16d | 6 | 16d | 1865 | 1960 | 1985 | 1155 | 1495 | 1525 | 1550 | 1005 |
| | UH-IF28-3 | - | HD28-3IF | | | | 14 ga | 12 | 16d | 6 | 10d | 1635 | 1775 | 1830 | 1170 | 1345 | 1470 | 1555 | 1015 |
| 2x10 (1-ply) | UL210 | LU210 | JL210 | 1-5/8 | 9-1/8 | 1-3/4 | 20 ga | 10 | 16d | 8 | 16d | 2175 | 2495 | 2575 | 1315 | 1835 | 1940 | 2010 | 1130 |
| | ULP210 | LUS20 | JUS210 | | | | 18 ga | 10 | 16d | 8 | 16d | 2190 | 2495 | 2575 | 1375 | 1835 | 1940 | 2010 | 1200 |
| | ULP-IF210 | LUC210Z | JL210IF-TZ | | | | 18 ga | 10 | 16d | 6 | 10d | 1385 | 1590 | 1730 | 1115 | 1195 | 1375 | 1490 | 965 |
| | UM210 | U210 | SUH210 | | | 2-1/4 | 16 ga | 18 | 16d | 8 | 16d | 2320 | 2320 | 2320 | 1065 | 2005 | 2005 | 2005 | 925 |
| | UH210 | HU210 | HD210 | | | | 14 ga | 18 | 16d | 8 | 16d | 2265 | 2375 | 2435 | 1565 | 1780 | 1850 | 1890 | 1365 |
| 2x10 (2-ply) | UL210-2 | - | - | 3-1/8 | 8-3/8 | 1-3/4 | 20 ga | 10 | 16d | 8 | 16d | 2175 | 2495 | 2575 | 1315 | 1835 | 1940 | 2010 | 1130 |
| | ULP210-2 | LUS210-2 | JUS210-2 | | | | 18 ga | 10 | 16d | 8 | 16d | 2190 | 2495 | 2575 | 1375 | 1835 | 1940 | 2010 | 1200 |
| | ULP-IF210-2 | - | - | | | | 18 ga | 10 | 16d | 6 | 10d | 1385 | 1590 | 1730 | 1115 | 1195 | 1375 | 1490 | 965 |
| | UM210-2 | U210-2 | SUH210-2 | | | 2-1/4 | 16 ga | 18 | 16d | 8 | 16d | 2320 | 2320 | 2320 | 1065 | 2005 | 2005 | 2005 | 925 |
| | UH210-2 | HUS210-2 | HUS210-2 | | | | 14 ga | 18 | 16d | 8 | 16d | 2265 | 2375 | 2435 | 1565 | 1780 | 1850 | 1890 | 1365 |
| | UH-IF210-2 | HUSC210-2, HUC210-2 | HUS210-2IF, HD210-2IF | | | | 14 ga | 18 | 16d | 8 | 10d | 2400 | 2555 | 2585 | 1560 | 1945 | 2085 | 2180 | 1355 |
| 2x10 (3-ply) | UL210-3 | - | - | 4-5/8 | 7-5/8 | 1-3/4 | 20 ga | 10 | 16d | 8 | 16d | 2175 | 2495 | 2575 | 1315 | 1835 | 1940 | 2010 | 1130 |
| | ULP210-3 | LUS210-3 | JUS210-3 | | | | 18 ga | 10 | 16d | 8 | 16d | 2190 | 2495 | 2575 | 1375 | 1835 | 1940 | 2010 | 1200 |
| | ULP-IF210-3 | - | - | | | | 18 ga | 10 | 16d | 6 | 10d | 1385 | 1590 | 1730 | 1115 | 1195 | 1375 | 1490 | 965 |
| | UM210-3 | U210-3 | SUH210-3 | | | 2-1/4 | 16 ga | 18 | 16d | 8 | 16d | 2320 | 2320 | 2320 | 1065 | 2005 | 2005 | 2005 | 925 |
| | UH210-3 | HU210-3 | HD210-3 | | | | 14 ga | 18 | 16d | 8 | 16d | 2265 | 2375 | 2435 | 1565 | 1780 | 1850 | 1890 | 1365 |
| | UH-IF210-3 | HUC210-3 | HD210-3IF | | | | 14 ga | 18 | 16d | 8 | 10d | 2400 | 2555 | 2585 | 1560 | 1945 | 2085 | 2180 | 1355 |
| 2x12 (1-ply) | UL212 | - | - | 1-5/8 | 10-3/16 | 1-3/4 | 20 ga | 10 | 16d | 10 | 16d | 1570 | 1570 | 1570 | 1715 | 1265 | 1265 | 1265 | 1475 |
| | ULP212 | - | - | | | | 18 ga | 10 | 16d | 10 | 16d | 2265 | 2265 | 2265 | 1730 | 1825 | 1825 | 1825 | 1510 |
| | UM212 | - | - | | | 2-1/4 | 16 ga | 22 | 16d | 10 | 16d | 1930 | 1930 | 1930 | 1530 | 1535 | 1535 | 1535 | 1325 |
| | UH212 | HU212 | HD212 | | | | 14 ga | 22 | 16d | 10 | 16d | 3060 | 3210 | 3310 | 1975 | 2355 | 2490 | 2575 | 1720 |
| 2x12 (2-ply) | UL212-2 | - | - | 3-1/8 | 9-7/16 | 1-3/4 | 20 ga | 10 | 16d | 10 | 16d | 1570 | 1570 | 1570 | 1715 | 1265 | 1265 | 1265 | 1475 |
| | ULP212-2 | - | - | | | | 18 ga | 10 | 16d | 10 | 16d | 2265 | 2265 | 2265 | 1730 | 1825 | 1825 | 1825 | 1510 |
| | UM212-2 | - | - | | | 2-1/4 | 16 ga | 22 | 16d | 10 | 16d | 1930 | 1930 | 1930 | 1530 | 1535 | 1535 | 1535 | 1325 |
| | UH212-2 | HUS212-2 | HUS212-2 | | | | 14 ga | 22 | 16d | 10 | 16d | 3060 | 3210 | 3310 | 1975 | 2355 | 2490 | 2575 | 1720 |
| | UH-IF212-2 | HUSC212-2, HUC212-2 | HUS212-2IF, HD212-2IF | | | | 14 ga | 22 | 16d | 10 | 16d | 3170 | 3335 | 3335 | 1950 | 2540 | 2695 | 2800 | 1690 |
| 2x12 (3-ply) | UL212-3 | - | - | 4-5/8 | 8-11/16 | 1-3/4 | 20 ga | 10 | 16d | 10 | 16d | 1570 | 1570 | 1570 | 1715 | 1265 | 1265 | 1265 | 1475 |
| | ULP212-3 | - | - | | | | 18 ga | 10 | 16d | 10 | 16d | 2265 | 2265 | 2265 | 1730 | 1825 | 1825 | 1825 | 1510 |
| | UM212-3 | - | - | | | 2-1/4 | 16 ga | 22 | 16d | 10 | 16d | 1930 | 1930 | 1930 | 1530 | 1535 | 1535 | 1535 | 1325 |
| | UH212-3 | HU212-3 | HD212-3 | | | | 14 ga | 22 | 16d | 10 | 16d | 3060 | 3210 | 3310 | 1975 | 2355 | 2490 | 2575 | 1720 |
| | UH-IF212-3 | HUC212-3 | HD212-3IF | | | | 14 ga | 22 | 16d | 10 | 16d | 3170 | 3335 | 3335 | 1950 | 2540 | 2695 | 2800 | 16906 |

### NOTES:

1. Nails designated as 16d shall be 16d common nails (0.162" x 3.5", $F_{yb}$ = 90,000 psi) and 10d shall be 10d common nails (0.148" x 3", $F_{yb}$ = 90,000 psi).
2. Allowable loads are provided for load duration factor ($C_D$) of 1.0, 1.15, 1.25 and 1.6
3. Allowable loads labeled "Floor" and "Roof" represent gravity loads.